Implementation Details of a Multi Purpose ISO 14443 RFID-Tool

Dario Carluccio, Timo Kasper, Christof Paar

Chair for Communication Security,
Ruhr-University Bochum, Germany
www.crypto.rub.de
{carluccio, tkasper, cpaar}@crypto.rub.de

Abstract. As technology evolves and chip sizes decrease, RFID has become widely deployed in ubiquitous tasks. The ISO 14443 standard is employed in the current generation of contactless smartcards and used in security sensitive applications such as e-passport to store biometric data and MasterCard's PayPass RFID payment cards. The industry has to keep the prices low, so that security measures on the chip may be rarely implemented, even when security and privacy is needed. The wireless interface facilitates new attacks, as the content of the RFID transponder can be read out from a distance without the owner noticing it, making relay attacks feasible. In order to conduct security analyses, tools providing the contactless interface and being able to perform known attacks, as well as to analyse the capabilities and functionality of the used hardware, need to be developed. In this contribution, an implementation of an ISO 14443 compliant multi purpose RFID reader and fake transponder is presented, which provides a bunch of promising facilities at a cost of well beyond 40 €.

Keywords: RFID, Low Level Reader, Fake RFID Tag, Relay Attack

1 Introduction

1.1 The Evolution of RFID

History When RFID was invented in the 1940s, it was used for identification of objects, i.e., allied airplanes by the military forces [31]. The so-called active tags needed a power supply, had rather large dimensions and carried small amounts of data, e.g., a fixed unique number.

The technology evolved, and with modern silicon wafer manufacturing nowadays chip sizes with an area as small as $0.15 \times 0.15\,\mathrm{mm}^2$ and a thickness of only $7.5\,\mu$m [13] are possible. This results in lower energy consumption of the transponders, making passive tags possible, which draw the energy needed for operation completely from the RF field, that is generated by a so-called reader device. At the same time, it is now possible to put by far larger memories and even microcontrollers with crypto co-processors on the tag, so that new applications like contactless, cryptographically enabled smartcards and their use as credit cards or electronic passports are becoming widespread and RFID an ubiquitous technology.

New perils As with every new technology, new threats appeared, beginning in the 1950s, when airplanes of the enemy pretended to be from the other party by replaying a previously recorded answer, demanding for inventions like Feistel's two pass authentification challenge, which, in extended variations, is still often used to prevent such attacks in modern RFID systems [31]. Moreover, the interchanged data is often encrypted with common block ciphers[24] like AES[1] or (triple-)DES[2], where security or privacy issues are relevant. Still, modern attackers get physical access to the chip or its field and perform so called side channel attacks like a DPA[3] or DEMA[4], which make it possible to obtain a secret key stored on the device by analysing the power consumption or electromagnetic emission over the time and correlating it with the code running on the hardware of the chip.

The number of possible threats is large and becoming larger, showing the necessity of well designed security schemes in the various systems.

1.2 Motivation

Limitations The energy consumption, i.e. the maximum number of switching transistors of a passive RFID tag is limited [19], whilst having the advantages of smaller size, lower weight and less cost. Typical implementations using a 0.35 μm process have 5000 gates and consume a current of 15 μA [31]. Furthermore, as the industry wants to keep the prices low, security measures and physical protection on the chip costing much chip area may be rarely implemented. Hence, certain mechanisms to protect devices against side channel- and other attacks will be very lightweight or won't be found at all on some RFID devices [23].

RF Impacts The physical interface of contactless smartcards brings new opportunities for possible attackers, because the wireless transmission of data via the RF (Radio Frequency) field can be easily eavesdropped by an attacker without the carrier of the tag taking note of it. So sniffing, i.e. acquiring and analysing the data transmitted between reader and tag to obtain a certain information, for example someone's photo or fingerprint, is possible over sometimes large ranges. Eavesdropping of communication between ISO 14443 devices over several meters has been performed by Finke and Kelter [8]. A relay (passive man-in-the-middle) attack is also feasible, i.e. redirecting the data interchanged between reader and tag over a separate communication channel to pretend to be the owner of someone else's tag. The data could then be manipulated in a way that gives some advantage to the attacker before relaying the data – an active man-in-the-middle attack.

Relevant Applications The ISO 14443 standard [15] is employed by many leading chip manufacturers in various RFID applications, to name Philips[5] Mifare identi-

[1] Advanced Encryption Standard
[2] Data Encryption Standard
[3] Differential Power Analysis
[4] Differential Electro Magnetic Analysis
[5] http://www.semiconductors.philips.com/

fication chips, which are used for ticketing during the world championship 2006 in Germany [30] and for public transport in the London Underground[29], or Texas Instruments' chips being implanted in MasterCard's PayPass [34] and Visa Contactless RFID payment cards [1]. Another crucial application is the digital passport (e-passport), standarised by the International Civil Aviation Organization (ICAO)[6], in which an ISO 14443 compliant chip stores amongst others biometric data [3].

Towards more Security To test and then improve the security of RFID systems, tools being able to perform the aforementioned attacks, as well as to analyse the capabilities and functionality of the used hardware, need to be developed. As the standards for contactless smartcards differ very much with regard to operating frequency, communication interface and transmission protocol[9], the hardware for a reasonable security analysis must be quite specialised and tailored to one certain standard.

The here proposed RFID tool is generally applicable to all devices compliant to part 2 (RF power and signal interface) and part 3 (initialisation and anticollision) of the ISO 14443(A), no matter if a proprietary protocol including crypto is implemented on a higher layer.

1.3 Related Work

DEMA A DEMA (Differential Electro Magnetic Analysis) is a special form of electromagnetic side channel analysis of cryptographic ICs and can also be applied to RFID smartcards, as shown by Carluccio et al. [5]. An antenna connected to an oscilloscope, placed as close as possible to the chip for obtaining a high SNR (Signal to Noise Ratio), is used to gather information about the secret key stored on the device by measuring and evaluating the electromagnetic emanation of the smartcard. To reduce the influence of the RF interface of the card on the measurements and to further increase the SNR, the chip can be removed from the plastic packaging and the RFID antenna separated from it.

As DEMA is based on a statistical test at one certain point in time, it is helpful to have a reliable signal to trigger the scope, to synchronise subsequent measurements and so be able to superimpose them without too much jitter.

The protocol of the Philips Mifare DESFire contactless smartcard, i.e. the applied mutual three pass authentification, has been reverse engineered [4] until to the point necessary for carrying out a DEMA to potentially achieve the secret key stored on the device. In Carluccio's attack, the challenges needed for the mentioned authentification were generated by a proprietary RFID reader device. For a DEMA attack, these had to be extracted from the communication data afterwards, which was very time consuming.

[6] http://www.icao.int

Remote Power Analysis Another power analysis attack requiring no physical contact to the device was performed by Oren and Shamir[23], with RFID tags operating in the UHF[7] range, where so called backscattering is used for tag-to-reader data transmission instead of load modulation(described in Section 2.3 below). Similar to the ISO 14443, the data is transferred from reader to tag by the use of gaps in the field of the reader, which at the same time has to provide the energy needed for operation of the tag. During the pause, the tag draws the energy from a built-in capacitor, which needs to be recharged when the field is turned on again. This leads to different shaped energy peaks occurring after the gaps, depending on the amount of power consumed by the tag during the pause, noticeable at the antenna of the reader. This behaviour was exploited to find an 8-bit password for the kill command of EPC Global tags. The described method may also be applicable to transponders compliant to the ISO 14443, which has to be further researched.

Relay Attack A relay attack, i.e. a passive man-in-the-middle (MITM) attack without being able to modify the data interchanged between reader and tag, as described by Kfir and Wool [16], was practically carried out by Hancke [11]. The special feature of this attack is, that it works on the physical layer and therefore can not be prevented by basic authentification protocols. The antenna of a reader possessed by the offender has to be placed close enough to the contactless card or other tag of a victim, while a second device emulating a tag is brought into the field of an RFID reader, e.g., at a cash desk possibly located at a distance from the owner of the card. The data being transferred by this reader is acquired and directly forwarded on the bit layer through a communication link to the reader of the attacker. There, the data is retransmitted to the card of the victim, which then answers to the request of the remote reader. The answer is relayed back via the device emulating a tag to the cashpoint's reader again and so, as the attacker continues relaying the data, both reader and tag will be convinced, that they are in close vicinity to each other, share the same secret and carry out their task, e.g. authorise a payment.

Hancke and Kuhn [12] proposed a possible countermeasure against these kind of attacks, based on ultra-wideband pulse communication, but as this method is not being employed in currently available devices on the market, still the most effective way to circumvent such an attack for the devices is to construct a Faraday's cage around the tag, e.g. by wrapping it with aluminium foil (see Section 4.4).

An important conclusion is, that the assumption of the physical interface of the ISO 14443 being secure is proven to be wrong, and that the card identified by a reader does not have to be in the direct vicinity, as declared by many manufacturers, but can be elsewhere and its data relayed from large distances without the permission of the owner.

More endeavours have to be made to enhance the security of the contactless interface, apart from just limiting the reading range[8] to 4 cm [34].

[7] Ultra High Frequency

[8] anyway being a contradiction to just waving a credit card to carry out payments, as advertised

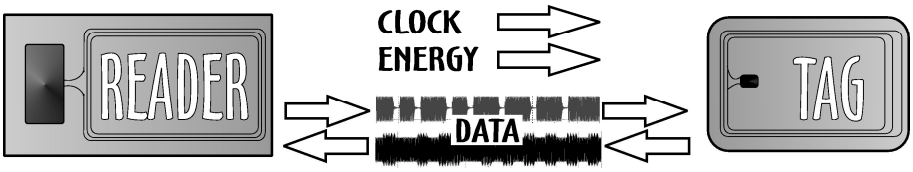

Fig. 1. RFID Operation Principle

The RFID tag should not be able to become active until the owner has performed a certain action, i.e. press a button or open the cover of his e-passport.

1.4 Our Contribution

A device shall be developed to ease the security analysis of maybe cryptographically enabled RFID devices with an ISO 14443A compliant RF interface, which makes it possible to perform the following tasks:

- emulation of an RFID tag,
- use of a transparent contactless interface on the bit layer, i.e. an implementation of a low level reader,
- investigations of conformance to the ISO 14443A[9],
- replay attack,
- relay attack,
- active MITM attack, i.e. possibility to intervene in the communication,
- (remote) power analysis,
- DEMA,
- fault analysis,
- analysis of protocols, i.e. logging the communication data,
- and testing of different types of antennas and tuning methods in diverse environments.

2 RFID Operation Principle

As depicted in Figure 1, a minimum RFID system consists of two main components, namely a reader generating a field, i.e. a sine wave with a frequency of 13.56 MHz, which supplies the second component for the system, a so called tag or transponder, with energy[10] and often a clock for operation of its digital circuits [9]. Both devices are equipped with a coupling element, which in the case of the ISO 14443 is a coil with typical 3-10 windings, which permits data transfer in both directions. Note, that the term RFID reader is a rather misleading description for a device that does not only receive data from the tag, but also transmits data to it.

[9] experiments with the here described showed, that some RFID readers do not strictly obey timing requirements specified in the ISO 14443 standard and so eventually make relay attacks easier

[10] in the case of passive tags

2.1 Inductive Coupling

The wavelength λ of the electromagnetic field, which is $\lambda = \frac{c}{f}$, where c denotes the speed of light and f the carrier frequency, is approximately 22.1 m at 13.56 MHz and therefore several times greater than the typical operating distance between reader and tag of 8-15 cm [9]. Accordingly, the field emitted from the coil of the reader may be treated as purely magnetic (similar to the common transformer principle), leading to the term inductive coupling used to describe the communication- and energy link between reader and tag.

2.2 Reader → Tag

The reader sends data to the tag, using a modified Miller code [9], where pauses have to be created with a duration of approximately 2.5 μs with 100 % ASK[11], i.e., the field has to be completely switched off and on by the reader.

2.3 Tag → Reader

The energy consumed by a tag is delivered via two transformer-like coupled coils of the RFID system. The resulting feedback of the transponder drawing more or less energy from the field can be sensed by a varying amplitude at the antenna of the reader. By switching on and off an additional load resistor and thereby deliberately draw more energy from the field than during normal operation, the tag can transmit its data to the reader. As the coupling between tag and reader is weak and the resulting effect on the field almost not noticeable, a subcarrier of the frequency of the reader is used by the tag to switch the resistor. This results in the information transmitted being placed in sidebands and makes the detection of the achieved 10 mV change of useful signal at a carrier amplitude of 100 V[12] possible [9]. The data of the tag is sent to the reader Manchester encoded[15], synchronous to the field of the reader, utilising the described OOK[13] with a subcarrier of $\frac{f_c}{16} = 847.5$ kHz.

3 Implementation Details of the Developed System

The system consists of a multi purpose reader device, which is equipped with a microcontroller, an RF interface and the ability to do some signal processing. A second device, termed Fake Tag, is able to perform load modulation and to gather the information sent by a remote reader. If properly fed with data, this fake tag appears like an authentic tag to an RFID reader. Between the two units, a communication link can be established, which is just a cable or can be wireless.

As depicted in Figure 2, the RFID tool can be integrated in a complete system, consisting of a PC (Personal Computer), the developed reader and Fake Tag, a digital oscilloscope and more measurement equipment, like near field probes for

[11] Amplitude Shift Keying
[12] corresponding to 80 dB SNR
[13] On-Off Keying

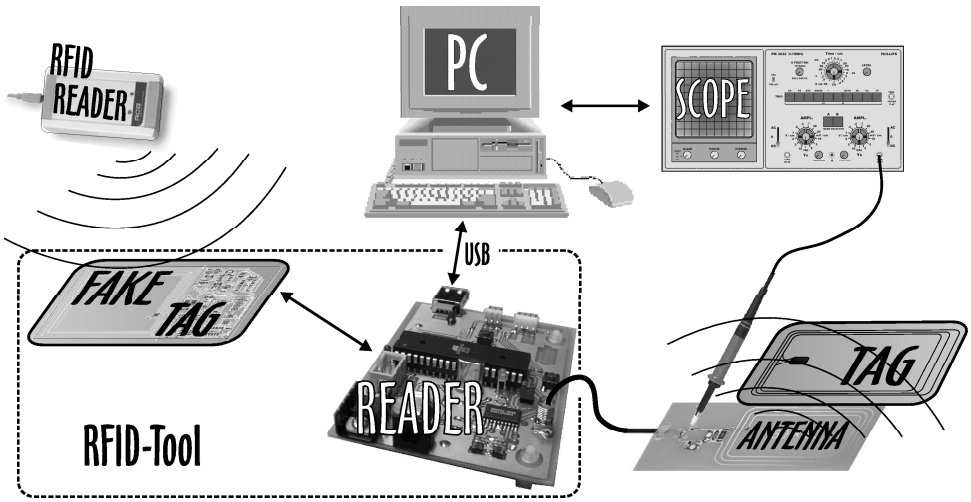

Fig. 2. System Overview

electromagnetic measurements. Reader and scope are connected to the PC, which controls the measurements and later combines and further processes the data acquired from scope and reader.

The developed hardware permits automatic recognition of the bits interchanged and them being transferred to a PC or specialised hardware [18] for cryptanalysis, maybe real time decrypting of the data transmitted, or other processing.

This work focuses on ISO 14443 type A devices using a data rate of $\frac{f_c}{128}$, with f_c being the carrier frequency of the reader, leading to $\frac{13.56\ MHz}{128} = 106\ \frac{kBit}{s}$ in both directions, as specified in the standard [15], part 2.

3.1 The Reader

The Microcontroller The RFID tool is based on an Atmel ATMega32 [2] microcontroller, clocked at 13.56 MHz, which is amongst others equipped with 32 kByte Flash RAM, 2 kByte SRAM and an ADC[14]. It employs a RISC[15] structure, leading to often only one clock cycle ($\approx$ 73.7 ns) needed for the execution of an instruction, therefore allowing relatively fast reaction to external signals, e.g., via interrupts. Every pin of the four general purpose byte I/O-ports provided by the Atmel is occupied in the developed application, emphasising the various potentials of the hardware.

For flexible operation and testing, the content of the microcontroller, i.e., the software running on it, can be updated without the need to remove it from the board through a programming adapter, which is part of the developed hardware and can be plugged into the parallel port of the PC.

[14] Analog to Digital Converter
[15] Reduced Instruction Set Computer

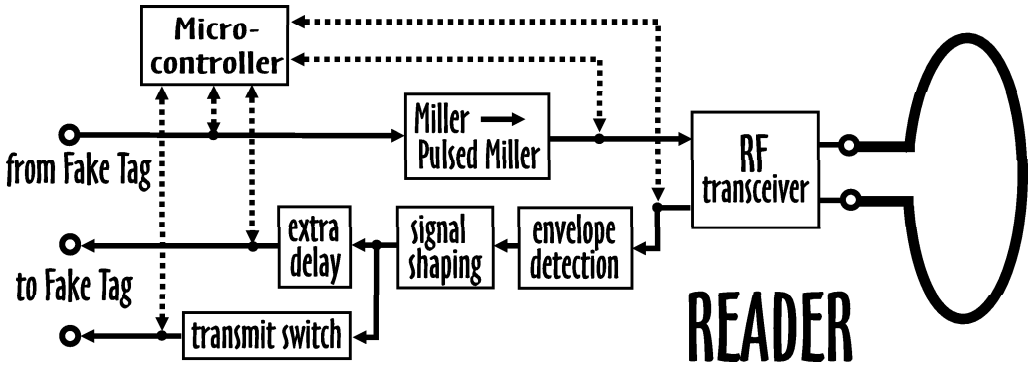

Fig. 3. Operation Principle of the RFID-Reader

The RF Transceiver The main part of the analogue front end is provided by the EM 4094 RF-transceiver [6] from EM Microelectronics, which possesses a 200 mW push pull transmitter operating at 13.56 MHz using an external quartz crystal, is capable of 100% ASK and ready for ISO 14443A operation at a price of less than 5 €. The received HF-Signal is demodulated and can be conditioned by an internal 400 kHz to 1 MHz lowpass filter, a 100-, 200-, or 300 kHz highpass filter and selectable receiver gain, thus being able to process the required subcarrier frequency of 848 kHz.

The chip is well suited for the application described here, as its operation is transparent, i.e. a high input level on the DIN pin will instantly switch off the field, while a low level switches it on, enabling flexible, direct control of the RF field. The 848 kHz signal received from the tag is output at the DOUT pin of the chip, from where it has to be further processed before being treated, e.g., by the microcontroller.

Several option bits need to be programmed into the chip to set it up for the desired operation mode, which is done after every power-on by the microcontroller, via a tree pin serial interface.

For convenience, output stage of the transceiver has been matched to feed the signal into a common 50 Ω coaxial cable, so that different antennas can be tested by plugging them into a connector placed on the PCB[16].

Note, that both Melexis' MLX90121 [21] and the S6700 Multi-Protocol Transceiver IC [32] from Texas Instruments offer possibilities very similar to the EM 4094 and are therefore suitable replacements.

USB Port Fast communication with a PC or other USB equipped hardware is made possible by the FT245R [10] parallel to USB chip from FTDI[17]. The device allows to send or receive packets of eight data bits, adequate to the 8-bit architecture of the microcontroller, by pulling a read or write input pin high and low, once a corresponding strobe pin indicates whether the device is ready. Fetching or writing out one byte of data is possible in only 3 clock cycles, as the minimum duration for

[16] Printed Circuit Board
[17] Future Technology Devices International

a pulse to shift data at the chip's input bus into the internal FIFO[18] buffer, specified with 50 ns in the datasheet, is automatically met with one clock cycle of the microcontroller taking 75 ns. So, using the supplied D2XX drivers, it is possible to exploit the maximum data transfer rate of 1 Megabyte/second between the RFID tool and a PC. In addition, so called VCP[19] drivers are available, providing access to the USB port as if it was a normal serial COM port, so that compability with programs implementing a normal serial port is given and any serial terminal program can be utilised. During tests, a serial connection with a baud rate of 921600 bits/second has been established.

Miller → Pulsed Miller In accordance to the ISO 14443A, pulses with a duration of approximately 2.5 μs have to be created. This is achieved by using a monostable multivibrator (monoflop) of the 74123 [28] type. Wired with the appropriate external capacitor and resistor, whose values are calculated from a formula in the data sheet, one unit is connected with a pin of the microcontroller. If it detects a rising edge at its input, this monoflop emits a high pulse with the mentioned duration at the DIN input pin of the EM 4094, resulting in the field being switched off briefly. The workload of the microcontroller is lessened this way, so it has some time, for example to prepare the next data to be sent.

Two more monoflops are utilised to convert the Miller coded data, received from the communication interface or generated by the microcontroller, into pulsed Miller, again fed into the DIN pin of the transceiver. The inputs of two chips are wired in such a manner, that a transition of any type leads to a pulse.

Modulated Manchester → Manchester The output at the DOUT pin of the EM4094 is modulated with a 848 kHz subcarrier, making it difficult to acquire the data on the side of the Atmel and requiring a high bandwidth for the communication channel to the Fake Tag (see Section 3.1 below). To lower the bandwidth significantly and make it easy for the μC to process the data sent by the tag, the modulated Manchester code is demodulated using kind of an envelope detector. At every rising edge of the signal at the DOUT pin of the RF transceiver, a short pulse is generated using a 74123 [28] monoflop. This signal is fed via a diode into a resistor-capacitor circuit, the capacitor of which slowly discharges through the resistor, when no pulse is present. Depending on the voltage at the capacitor, an LM 311 voltage comparator [22] decides, whether the subcarrier is currently present or not, leading to a high or low at its output. The LM 311 is operated from the single 5 Volt supply on the PCB and, wired with a pull-up resistor at its output, is able to produce appropriate 0 and 5 V levels.

Analogue Delay Unit As the demodulation of the signal received from the RF transceiver costs some time (in this case ≈ 1.5 μs), the answer of the tag is sometimes not accepted when being relayed to a remote reader, because it is not well

[18] First In First Out
[19] Virtual Com Port

synchronised with it. For this case, a circuit has been developed, which adds a very short fixed time delay to the outgoing signal, without altering the waveform. The delay can be varied from 0 to approximately 7 μs, so that a point in time during the bit period of $(106\frac{kBit}{s})^{-1}$ =9.44 μs can be adjusted, for which the relayed answer of the tag is valid.

Communication Link Interface An interface for a separate module to communicate with the RFID tool over an infrared or RF wireless link is installed on the PCB, providing data input and output pins, a serial programming interface and power supply. An additional output pin indicates, whether TX(transmit) or RX(receive) mode is required. The data pins can be driven directly by the peripheral circuitry of the RFID tool or steered by the microcontroller, which allows for features like emulation of tags and microcontroller-based delaying of the interchanged signals.

The bandwidth needed for the communication link is kept low, as due to prior processing only true Manchester or Miller encoded data is to be transferred. Miller or NRZ[20] encoded data demands for a bandwidth of approximately the data rate, whereas a Manchester coded bit stream needs twice as much bandwidth, because, in the worst case, the amount of transitions is doubled. These bandwidth requirements by the Manchester code could be circumvented by transforming Manchester to standard NRZ, as NRZ data only needs half of the bandwidth demanded by Manchester code. After equipping the wireless modules with the corresponding en-/decoding chips, e.g. from Intersil[21] or Data Delay Devices[22], cheap wireless RF modules available on the market with a maximum data rate of 115 kBit/s are sufficient, while otherwise a bandwidth of at least 2·106 kBit/s=212 kBit/s is required.

3.2 The Fake Tag

The Fake Tag is designed to send and receive data to an RFID reader, in cooperation with the developed reader, and can be utilised for relay attacks as well as for tag emulation. Unlike a normal (passive) tag, the fake tag described here has it's own power supply[23], which might also be used for supplying a wireless module.

Parallel Resonant Circuit To be able to communicate with a reader, a tag needs a coil as an antenna to establish the coupling to the counterpart of the reader. A capacitor is connected in parallel to this inductance, to form a parallel resonant circuit with a resonant frequency corresponding to the carrier frequency of, in this case, 13.56 MHz.

For an ideal parallel resonant circuit, capacitance and inductance are selected according to $f = \frac{1}{\sqrt{LC}}$, where f denotes the carrier frequency of the reader, C the capacitance and L the inductance of the tuned circuit [35]. In practice, first the value

[20] Non Return to Zero
[21] http://www.intersil.com
[22] http://www.datadelay.com
[23] can be a small lithium battery

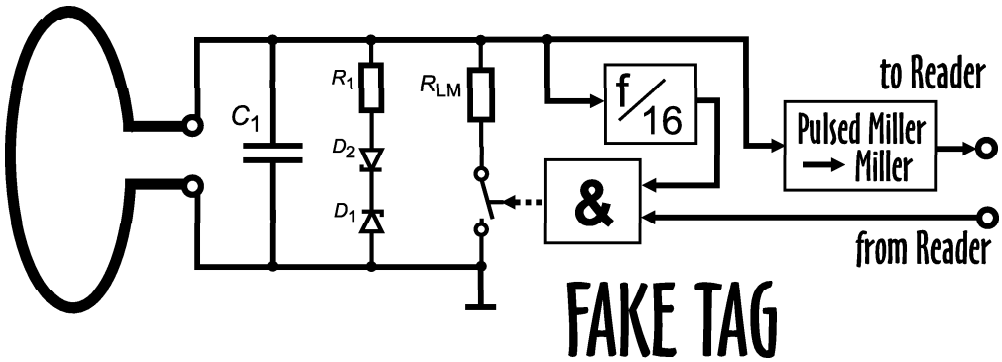

Fig. 4. Operation Principle of the Fake-Tag

for L is derived from the shape and dimensions of the coil, afterwards the optimal C is calculated and then realised as a trimmable capacitor, so that the circuit can be tuned more precisely later on.

The impedance of a parallel tuned circuit reaches a maximum at the resonance frequency. It follows that the induced voltage also reaches a maximum. The amplitude can become relatively large, so two Zener-diodes in opposite directions and an resistor in series are connected in parallel to the LC-tank, limiting the maximum possible voltage and thus protecting the rest of the circuit.

Generation of a Subcarrier The subcarrier with a frequency of $\frac{f_c}{16}$ =847.5 kHz is derived from the field generated by the reader. The antenna is connected to the input of a 4-bit binary counter 74393[25] through a resistor, which limits the maximum current into the input stage. The CMOS gates at the input of the 74HC393 are protected against damage, e.g. caused by high voltages, by means of internal protection diodes, as long as the maximum diode current of 20 mA is not exceeded[7]. The fourth output of the binary counter toggles every $2^3 = 8$ clock cycles, which equals frequency division by 16, i.e. the desired subcarrier.

Modulation with the Subcarrier The modulation itself is simply achieved by ANDing the incoming Manchester coded signal with the output of the binary counter using a common 7408 [26], resulting in modulated Manchester code.

Load Modulation As described above in Section 2.3, a resistor has to be connected in parallel to the antenna of the tag to achieve (resistive) load modulation. Here, the switch is realised with an IRFD110 [14] n-channel MOSFET, allowing for fast switching and a maximum drain-source voltage of 100 V, whilst having a low on-resistance of 0.54 Ω. A diode in series with the resistor prevents the internal avalanche diode of the MOSFET from conducting during the phase of the HF field causing a negative voltage between drain and source, which would lead to an irreversible damage of the transistor. The output of the AND gate is connected to

gate of the transistor. Accordingly, the 848 kHz-modulated Manchester code is again modulated onto the 13.56 MHz field of the reader and the information put into the sidebands of the carrier. With an n-channel transistor, load modulation is only possible during the positive half cycle of the field. Still, this makes it easier for the tag to distinct between gaps in the field and a load modulation, so that a good overall performance was obtained with the described circuit.

Acquire Miller Pulses from Reader The Fake Tag has to be able to distinguish between gaps in the HF field caused by the reader sending data and itself sending data, i.e. load-modulating the field. Furthermore, in addition to getting rid of the high frequent fraction of the field, a wide voltage range at the parallel LC-circuit must be handled, as the amplitude varies considerably with the distance between the two coils. To achieve this goal, a LM 311 comparator [22] is used again, this time with two envelope detectors as described above (see section 3.1) at its inputs, which are both connected in parallel to the resonant circuit. The one at its negative input is dimensioned for a fast response and distinguishes between the field being completely switched off and the load modulation case. If the field is completely switched off, the output of the comparator will become high. The other envelope detector has a rather large time constant and averages the voltage at the antenna, which is divided by a factor of 10 and then connected to the non-inverting input of the comparator, thus adapting the threshold voltage to the current field strength. This makes the circuit immune to noise caused by the HF field and extends the operating range.

Pulsed Miller → Miller The conversion of the pulses, received from the reader, to normal Miller code is necessary to reduce the bandwidth needed for transmission through the communication link. The output of the comparator is connected to the input of a positive edge triggered 7474 D-type flip-flop [27], whose inverted output is fed back into the D-input, resulting in a change of the output state on every occurring rising edge. By this conversion from pulses into transitions, a Miller coded signal is obtained and wired to the communication interface. The power-on state of the flip-flop is undefined, but this does not mean a problem, as Miller coded bits are represented by transmissions, not by levels.

3.3 Software

The developed software is mostly written in C (parts in assembler) and compiled with the free avr-gcc compiler. The following functions are currently implemented:

- Setting up and controlling the EM4094 RF transceiver,
- receiving and sending data from and to the USB port,
- a precise wait/delay function,
- implementation of standard and short frames, including parity bit generation, as specified in part 3 of the ISO 14443,
- generation and sending of Manchester coded data = tag emulation,
- generation and sending of Miller coded data = reader functionality,
- the user can switch between the reader-, relay- and tag emulation operating modes.

4 Results

4.1 Low Level Reader

The flexible low level reader function has been successfully tested with several ISO 14443 compliant tags, which all answered to the commands sent out by the reader. The exact behavior can be flexibly steered by programming the microcontroller.

4.2 Timing Analysis of an ACG reader

Using the tag emulation mode of the RFID tool, timing measurements have been performed with an ACG[24] Dual 2.1 Passport Reader module. The ATQ[25] answer of a tag to a $REQA$[26] issued by the ACG-reader was intentionally delayed and the behavior, i.e. if the answer was accepted as valid or not, has been analysed. ISO 14443 requires the tag to answer to a $REQA$ exactly after 86.9 μs.

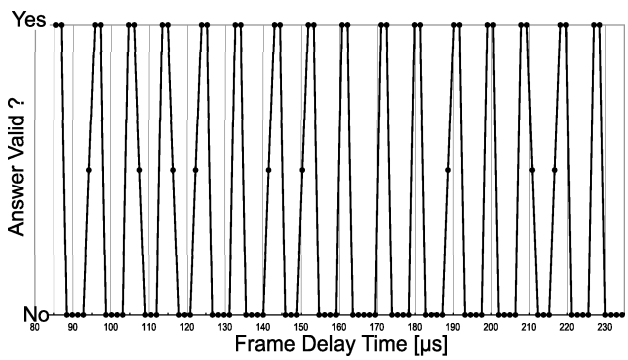

Fig. 5. Measured behavior of ACG Reader.

The results are presented in Figure 5. Every 9.44 μs, which equals a period of one bit at 106 kBit/s data rate, during a time-slice of approximately 2.5 μs, the tags answer was repeatedly accepted. Compliance with the strict timing requirements of the ISO 14443 [15] during the initialisation phase could not be observed.

4.3 Relay attack

A relay attack as described above (see section 1.3) has been carried out with

[24] http://www.acg.de
[25] Answer to request command
[26] Request command type A

- a digital passport (e-passport), issued in January 2006 by the Federal Republic of Germany,
- the student identity chip card used at the Ruhr-University in Bochum, used for paying food in the cafeteria,
- Philips classic Mifare and DESFire cryptographically enabled smartcards,
- an Atmel AT88SC153 smartcard,
- a ticket for the FIFA world cup 2006 in Germany.

The attack has been realised until to the point of at least reading out the UID of the tags and, in the case of the Mifare classic, until to successful login to the card. Furthermore, the 64 Byte content of the world cup ticket was read out remotely.

Timing When performing a MITM attack, an extra delay induced by processing the signal is inevitable. As shown above in section 4.2, the analysed ACG-reader did not obey the strict timing constraints during the initialisation phase, as specified in the standard. But even if the reader scrutinised these timing requirements, the attack could be carried out successfully, as the (fixed) bit sequence of an *ATQA* command could be stored on the μC and then sent out fast enough after an incoming *REQA*.

4.4 Antenna Tests

Various kinds of antennas were built, tuned to resonance with the carrier frequency of the reader, matched to the 50 Ω coaxial cable, and tested with regard to operating range and the influence of different environments. Amongst others it turned out, that the read range is best, if the antennas are properly aligned to each other and the antenna size of the tag matches the dimensions of the antenna of the reader, seemingly as then the best inductive coupling is achieved.

Enhance Privacy We furthermore investigated countermeasures against relay attacks and found, that aluminum foil shields the device and so protects it from being read out by unauthorised readers. Experiments showed, that a single layer of foil wrapped around the tag completely prevents reading out its data. Tests shielding the tag with foil from only one side showed, that in this case the reading range is only slightly (approximately 10%) decreased, thus not providing secure protection.

5 Future Prospects

5.1 Improved Man in The Middle Attack

Data Logging The μC may be used for logging the data interchanged between tag and reader. The recorded data can be sent over the USB port to a PC for further processing. This can be helpful to analyse unknown protocols, as well as to store the exchanged data for further analyses, e.g., key-search with cost effective hardware [18].

Active MITM In addition, the μC could perform an active task by modifying the data relayed between tag and reader or adding an additional delay to the signals.

5.2 Increasing the Range

At the moment, the achieved read range with the developed reader and the antennas used is approximately 5-10 cm. As shown by Kirschenbaum and Wool [17], it is possible to extend this range to approximately 25 cm. The utilised power amplifier, proposed in a Melexis application note [20], can be modified slightly to fit into the design described here, as well as the copper tube antenna suggested by TI [33].

5.3 Power Analysis

It is promising, to use the RFID tool for execution of a (remote) power analysis similar to the one described above (see Section 1.3). The DOUT1 pin of the EM4094 can be programmed to act as a direct analogue output of the received signal, which is proportional to the energy consumed by a tag. This signal can then either be acquired by the internal ADC of the Atmel or with an oscilloscope, if a better resolution is required.

5.4 Improvement of DEMA

A improved DEMA attack, as described in Section 1.3, can be performed, with the RFID tool providing the contactless interface to the smartcard. In addition, a reliable trigger signal for the scope can issued by the microcontroller. Due to the flexibility of the low level reader, the performed operations can be aborted at any point in time, bringing advantages with regard to timing. The major improvement of the developed system with respect to a DEMA is, that the time consuming extraction of the challenges sent out by the reader from the communication data is no more necessary. Instead, they can be directly obtained from the low level reader or freely be chosen by the attacker.

5.5 Fault Attacks

As the reader can be freely programmed, fault attacks are feasible, where the device is forced to show erroneous performance, by either sending it invalid data or perturb other parameters like the power supply.

5.6 Implementation of any Protocol

Any new protocol according to the ISO 14443 standard can be implemented by reprogramming the microcontroller.

6 Conclusion

A cost effective RFID low level reader and a fake tag has been designed, which can be used for various promising purposes. With the developed hardware, relay attacks between various RFID tags and a commercial ISO 14443 RFID reader have been carried out successfully. Possessing the RFID tool, one is in the position to emulate an RFID tag and thus perform replay attacks.

Furthermore was discovered, that a commercial RFID reader does not obey certain timing requirements specified in the ISO 14443 standard and so eases relay attacks. Even if an RFID reader scrutinised the timing constraints, a method is proposed to still carry out the attack successfully with the designed hardware.

Employing ISO 14443 RFID tags in security sensitive applications should be regarded very critically, as the physical interface is proven to be insecure against relay attacks. The card identified by a reader does not have to be in its direct vicinity, as the data can be forwarded from large distances without permission or notification of the owner. If an RFID tag is indispensable, we suggest a metal shielding to prevent unauthorised usage of a tag and propose that, in sensitive applications, a tag should not be able to become active, until the owner has performed an action, e.g., press a button or open the cover of his electronic passport.

References

1. Mastercard and Visa agree to a common contactless communications protocol. http://www.corporate.visa.com/md/nr/press252.jsp.
2. Atmel. ATMega32 data sheet. http://www.atmel.com/dyn/resources/prod_documents/doc2503.pdf.
3. BSI - German Ministry of Security. ePass - Der Reisepass mit biometrischen Merkmalen. http://www.bsi.de/fachthem/epass/.
4. D. Carluccio. Electromagnetic Side Channel Analysis for Embedded Crypto Devices. Master's thesis, Chair for Communication Security at the Ruhr University Bochum, 2005. Diploma thesis.
5. D. Carluccio, K. Lemke, and C. Paar. Electromagnetic side channel analysis of a contactless smart card: first results. In *ECRYPT Workshop on RFID and Lightweight Crypto*, pages 44–51, Graz, Austria, July 2005. ECRYPT. http://www.iaik.tugraz.ac.at/research/krypto/events/RFID-SlidesandProceedings/Proceedings-WSonRFIDandLWCrypto.zip.
6. EM Microelectronic. EM4094 fact sheet. http://www.emmicroelectronics.com/webfiles/product/rfid/ds/EM4094_fs.pdf.
7. Fairchild Semiconductors. Application note 313: DC electrical characteristics of MM74HC high speed logic. http://www.fairchildsemi.com/an/AN/AN-313.pdf.
8. T. Finke and H. Kelter. Radio Frequency Identification Abhörmöglichkeiten der Kommunikation zwischen Lesegerät und Transponder am Beispiel eines ISO14443-Systems. http://www.bsi.de/fachthem/rfid/Abh_RFID.pdf. BSI - German Ministry of Security.
9. K. Finkenzeller. *RFID Handbook: Fundamentals and Applications in Contactless Smart Cards and Identification.* John Wiley and Sons, 2nd edition, 2003.
10. FTDI. FT245 USB chip data sheet. http://www.ftdichip.com/Documents/DataSheets/DS_FT245R_v105.pdf.

11. G. Hancke. A practical relay attack on ISO 14443 proximity cards. http://www.cl.cam.ac.uk/ gh275/relay.pdf, 2005.
12. G. P. Hancke and M. G. Kuhn. An RFID distance bounding protocol. In *Proceedings of IEEE/Create-Net SecureComm 2005*, pages 67–73. IEEE Computer Society Press, 2005.
13. Hitachi. World's smallest and thinnest 0.15×0.15 mm, 7.5μm thick RFID IC chip. http://www.hitachi.com/New/cnews/060206.html.
14. International Rectifier. Data sheet for IRFD110 N-channel MOSFET. http://www.irf.com/product-info/datasheets/data/irfd110.pdf.
15. ISO/IEC 14443. Identification cards - Contactless integrated circuit(s) cards - Proximity cards - part 1-4. www.iso.ch, 2001.
16. Z. Kfir and A. Wool. Picking virtual pockets using relay attacks on contactless smartcard systems. Cryptology ePrint Archive, Report 2005/052, 2005. http://eprint.iacr.org.
17. I. Kirschenbaum and A. Wool. How to build a low-cost, extended-range RFID skimmer. Cryptology ePrint Archive, Report 2006/054, 2006. http://eprint.iacr.org/.
18. S. Kumar, C. Paar, J. Pelzl, G. Pfeiffer, A. Rupp, and M. Schimmler. How to break DES for 8,980. In *International Workshop on Special-Purpose Hardware for Attacking Cryptographic Systems — SHARCS'06, Cologne, Germany*, April 2006.
19. T. Lohmann, M. Schneider, and C. Ruland. Analysis of power constraints for cryptographic algorithms in mid-cost RFID tags. In J. Domingo-Ferrer, J. Posegga, and D. Schreckling, editors, *Smart Card Research and Advanced Applications*, volume 3928 of *Lecture Notes in Computer Science*, pages 278–288. Springer, 2006.
20. Melexis. Application note: A power booster for the MLX90121. http://www.melexis.com/prodfiles/0003881_AN90121_4_1.pdf.
21. Melexis. MLX90121 datasheet. http://www.melexis.com.
22. National Semiconductor. Datasheet for LM311 voltage comparator. http://www.national.com/pf/LM/LM311.html#Datasheet.
23. Y. Oren and A. Shamir. Power analysis of RFID tags. http://www.wisdom.weizmann.ac.il/ yossio/rfid/.
24. C. Paar. Lecture Notes Applied Cryptography and Data Security, Dec 2004.
25. Philips. Data sheet for 4 bit binary ripple counter 74393. http://www.semiconductors.philips.com/pip/74HC393D#datasheet.
26. Philips. Data sheet for 7408 AND gate. http://www.semiconductors.philips.com/pip/74HC08N.
27. Philips. Data sheet for D type flip-flop 7474. http://www.semiconductors.philips.com/pip/74F74.html#datasheet.
28. Philips. Data sheet for monostable multivibrator 74HC/HCT123. http://www.semiconductors.philips.com/pip/74HCT123D#datasheet.
29. Philips. Philips' MIFARE Identification Chips just the ticket for London's Oyster Smart Card. http://www.semiconductors.philips.com/news/content/file_910.html, 2002.
30. Philips. Philips scores in German stadiums. *On the move*, page 3, Mar 2006.
31. M. R. Rieback, B. Crispo, and A. S. Tanenbaum. The evolution of RFID security. *Pervasive Computing*, 5(1), Jan-Mar 2006.
32. Texas Instruments. S6700 RFID transceiver datasheet. http://www.ti.com/rfid/docs/manuals/pdfSpecs/RI-R6C-001A.pdf.
33. Texas Instruments. HF Antenna Cookbook Technical Application Report. http://www.ti.com/rfid/docs/manuals/appNotes/HFAntennaCookbook.pdf, 2004.
34. Texas Intruments. Texas Instruments to deliver RFID solution for MasterCard PayPass. http://www.ti.com/rfid/docs/news/news_releases/2005/rel01-17-05a.shtml.
35. U. Tietze and C. Schenk. *Halbleiter-Schaltungstechnik*. Springer, eleventh edition, 2001.